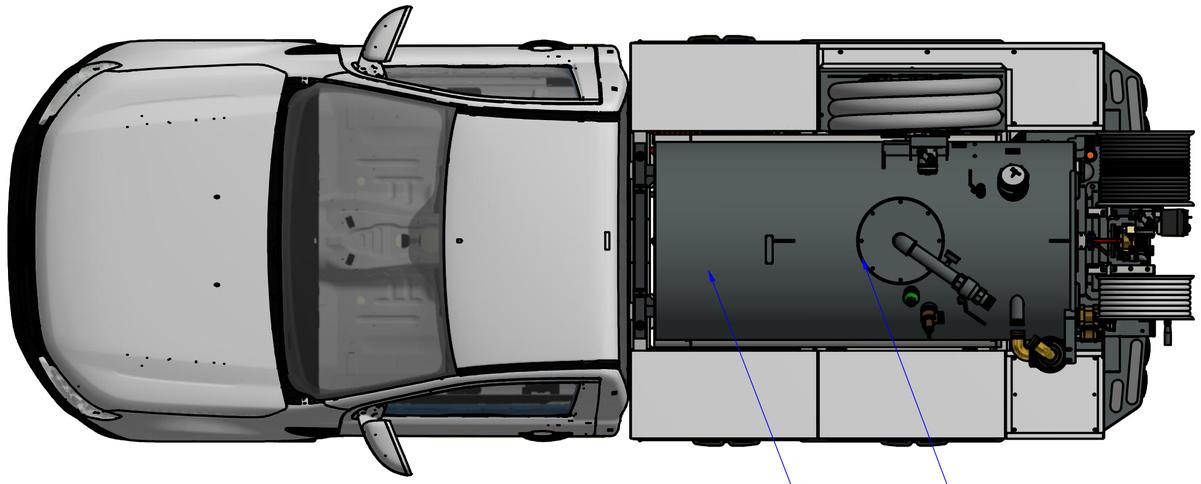


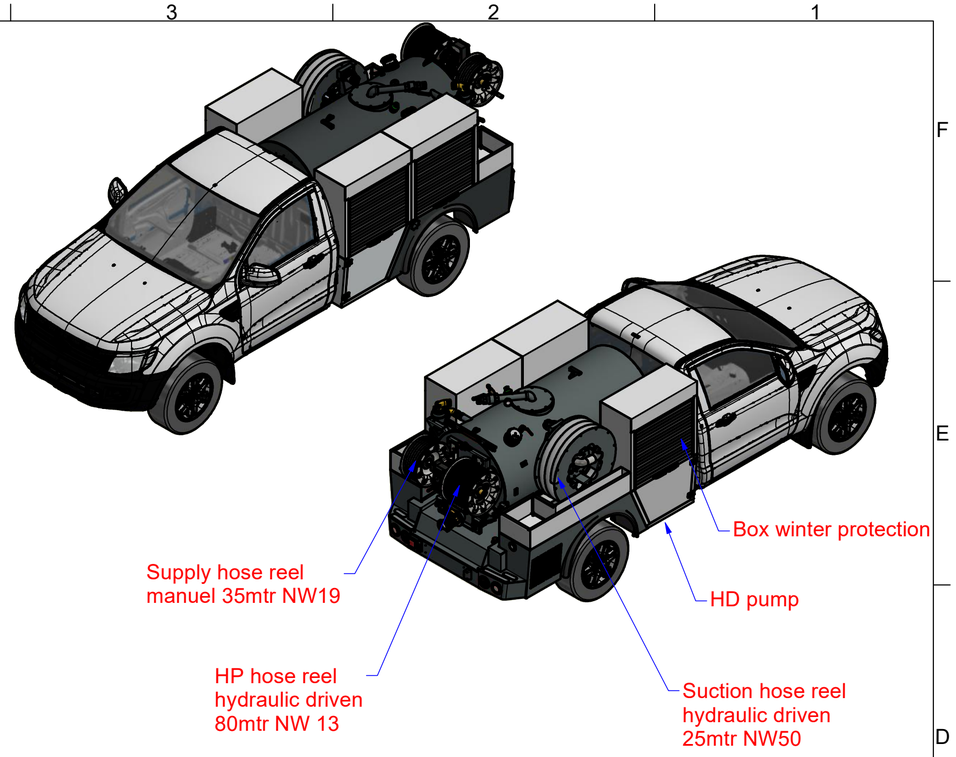


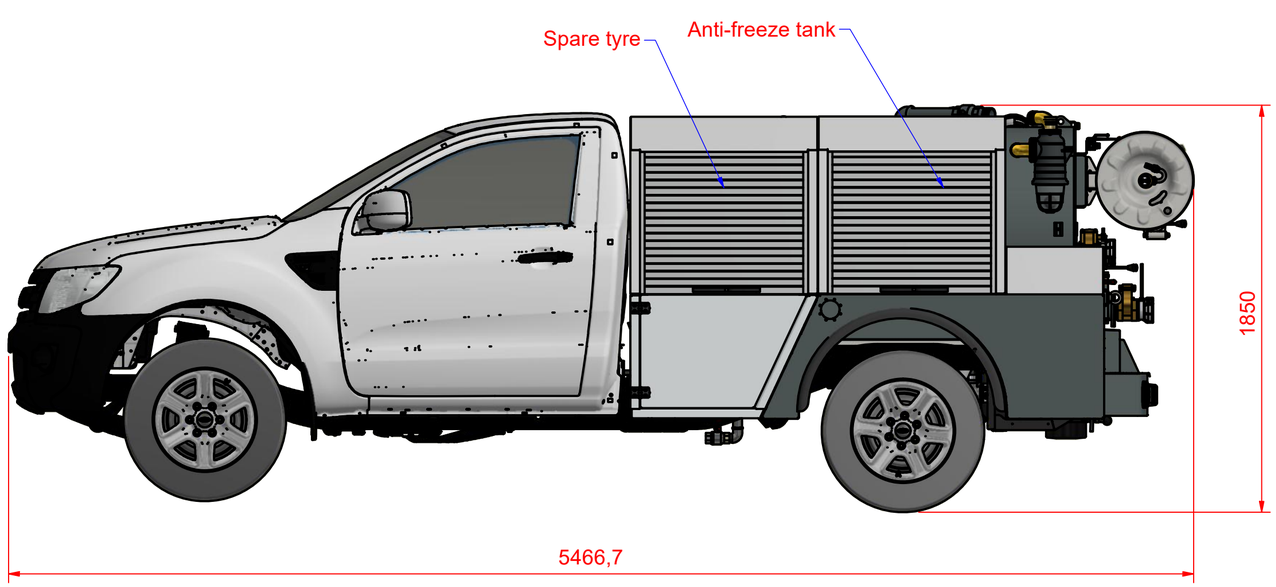


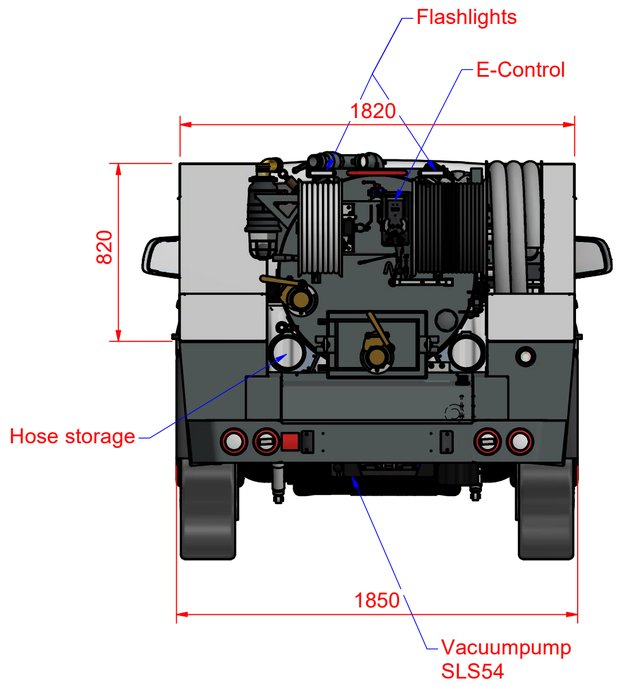


Details not on drawing
according to order
Color:White: Ford X3368
Gray : RAL 7015
Galvanized

# For Approval

so 125802

Unless indicated otherwise see **Rioned standard sheet manufactured parts** and:

3,2 / 12,5 **Break** corners and edges.

Fold: R internal = material thickness

Linear sizes (except welding : 0-150: ±0,5 150-2000: ±1)

| 0,5-6: ±0,1 | 6-30: ±0,2 | 30-120: ±0,3 | 120-400: ±0,5 |
|---|---|---|---|
| 400-1000: ±0,8 | 1000-2000: ±1,2 | 2000-4000: ±2,0 | |

Description: Urban Combi 2.0

Date: 26-3-2021

Drawn by: Marcel

Checked by:

Material: Material number:

Treatment:

Rioned.

Centaurusweg 45, 5015 TC Tilburg
Tel.: 013-5479100 e: info@rioned.com

WWW.RIONED.COM

This drawing is the property of Rior B.V. / Rioned and may not be reproduced without her consent, nor given to third parties.

File: H:\VaultWorkspace\Inventor\R&D\EN19-04 CityCom 2.0\UC 2.0\Afzetunit 2\samenstelling.iam

Sh. 1 of1 sh.

Sizes in mm A2

Prod. no.:

Drawing no.: so125802 /01